interflow
Guaranteed in Control

Pass-Through box
datasheet

Pass-Through box datasheet

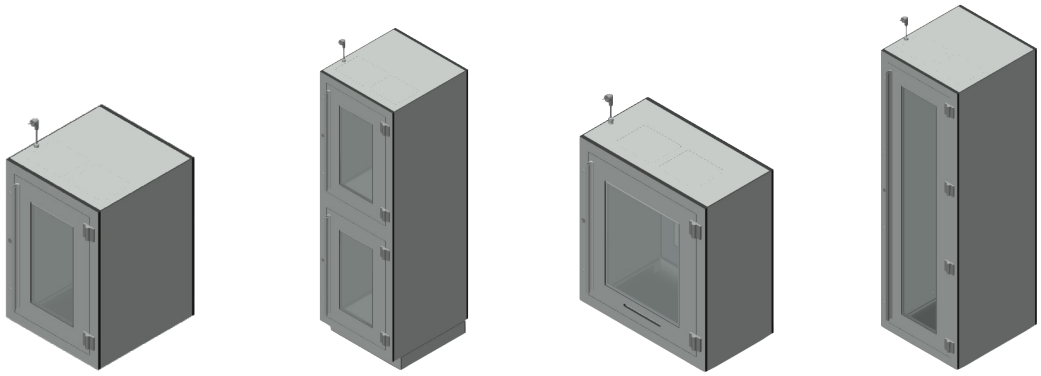

Type	DGS 400 single	DGS 400 double	DGS 600 single	DGS 1800 single
Material	HPL Compact	HPL Compact	HPL Compact	HPL Compact
Door material	Glass	Glass	Glass	Glass
External dimensions (wxdxh)	626 x 650 x 925 mm	626 x 650 x 1940 mm	836 x 450 x 925 mm	626 x 650 x 1957 mm
Internal dimensions (wxdxh)	419 x 626 x 768 mm	419 x 626 x 768 mm (2 x)	619 x 420 x 768 mm	419 x 626 x 1800 mm
Weight	± 90 kg	± 180 kg	± 90 kg	± 180 kg
Number of door hinges	2 pcs	4 pcs	2 pcs	4 pcs
Door operation	Aluminium handle	Aluminium handle	Aluminium handle	Aluminium handle
Interlock	Yes	Yes	Yes	Yes
Interlock operation	Touchless	Touchless	Touchless	Touchless
Interlock indication	Visual LED green / red	Visual LED green / red	Visual LED green / red	Visual LED green / red
Voltage	230V / 50Hz	230V / 50Hz	230V / 50Hz	230V / 50Hz
Service access	Removable panel	Removable panel	Removable panel	Removable panel

interflow
Guaranteed in Control

OPTIONS	DGS 400 single	DGS 400 double	DGS 600 single	DGS 1800 single
Grille panel	Scan module	Scan module	Scan module	Scan module
Airflow	Air slots in doors	Air slots in doors	Air slots in doors	Air slots in doors
Finish towards wall	HPL	HPL	HPL	HPL
Finish towards ceiling (1 or 2 sides)	HPL	HPL	HPL	HPL
Finish towards floor (1 or 2 sides)	HPL	X	HPL	X
Air supply or exhaust connection	Ø 80 mm	Ø 80 mm	Ø 80 mm	Ø 80 mm
Supply air or exhaust air	10 m3/h	20 m3/h	10 m3/h	25 m3/h
Absolute filter supply or exhaust EN1822	H14	H14	H14	H14
BMS interlock	Yes	Yes	Yes	Yes
Differential pressure meaasurement provision	Yes	Yes	Yes	Yes
Perforated shelves	Max. 2 pcs	Max. 2 pcs	Max. 2 pcs	Max. 2 pcs

Want to know more about the possibilities?

Contact our advisors:

Arjan van der Scheer
M +31 (0)6 53 54 12 05
E arjan.vander.scheer@interflow.nl

Niek Nuijten
M +31 (0)6 27 36 73 75
E niek.nuijten@interflow.nl

Interflow
De Stek 15
1771 SP Wieringerwerf
Nederland
T +31 (0)227 60 28 44
E info@interflow.nl
W www.interflow.nl